Data Sheet

Itemnumber....: 5523551400

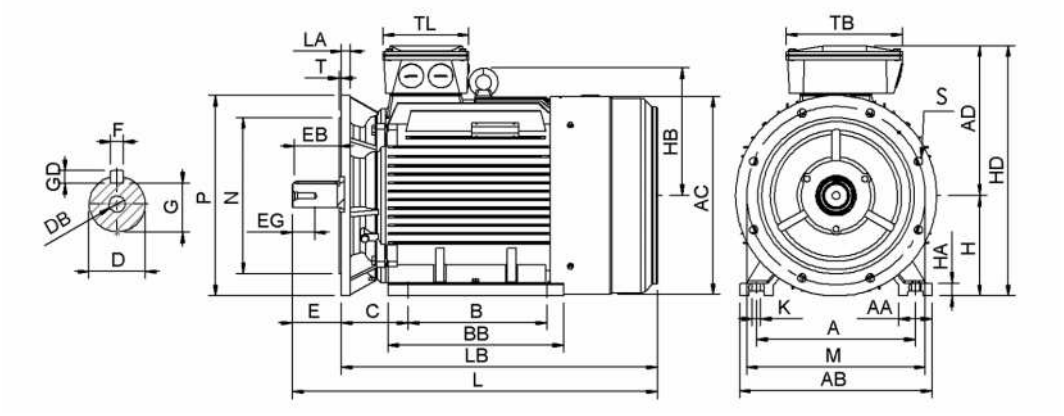

A = 610	**AC = 699**	**BB = 750**	**DB = M24**	**EG = 56**	**GD = 12**	**HB = 489**	**L = 1507**	**LE = 1441**	**P = 800**	**TB = 460**
AA = 116	**AD = 664**	**C = 254**	**E = 140**	**F = 20**	**H = 355**	**HD = 1019**	**LA = 25**	**M = 740**	**S = 8-Ø24**	
AB = 726	**B = 560**	**D = 75**	**EB = 130**	**G = 67,50**	**HA = 52**	**K = 6**	**LB = 1367**	**N = 680**	**T = 6**	

Version
Type.....: HMC3 355L1-2
Design.....: Induction motor
Standard series.....: IEC 60034
Phase / Voltage range.....: 3~ / Low

Electrical design
Efficiency.....: IE3
Pole.....: 2
Power at 50 Hz (kW).....: 315
Hz.....: 50
Voltage.....: 400VD/690VY
Winding voltage.....: 400VD/690VY 50 Hz
Power output (kW).....: 315
Duty.....: S1
Insulation class.....: F
Temperature rise.....: B

Motor protection
Thermal protection main....: PTC 3x 155 dgr
Thermal protection second..: None
Space heater.....: None
Temperature detector.....: No
SPM.....: No
IR wire.....: No
Tropical insulation.....: No

Explosion protection
According to.....: None
Type of protection.....: None

General
Direction of rotation.....: CW
Painting.....: RAL 9005 Gloss 10
Nameplate.....: Multivoltage
Special packing.....: No
Special requirements.....: No

Mechanical design
Frame size.....: 355
Mounting.....: B35
Rain cap.....: No
Protection class.....: IP55
Cooling method.....: IC411/TEFC
External grounding.....: Yes
Drain hole.....: Yes
Frame material.....: Cast Iron
Material approval.....: None
Shaft.....: IEC standard
Key.....: Closed key
Balancing.....: Half key balancing
Vibration class.....: Grade-A
Weight (kg).....: 1.830

Environment condition
Ambient temp. min. (°C)..: -20
Ambient temp. max. (°C)..: 40
Altitude (mtr up to).....: 1000

Bearing
DE Bearing.....: 6319/C3
NDE Bearing.....: 6319/C3
Fixed bearing.....: DE

Terminal box
Tbox position.....: Top
Cable entry direction.....: Right (from DE)
Cable entry
Main.....: 2 x M72x2,0
Metal blindcaps
Accessory.....: 2 x M20x1,5
Metal blindcaps
Connection type.....: Delta (D)
Terminal board thread.....: 6-M16

Test values
Rotor inertia (kgm²).....: 4,20
Noise level (dB(A)).....: 96
No load current (A).....: 108
Winding resist. (ohm).....: 0,0063
Starting time (sec.).....: 0,87
Temp. rise winding (K).....: 71
Temp. rise surface (K).....: 43

Rated power (kW) .....:	315	305	380	365
Frequency (Hz) .....:	50	50	60	60
Voltage (V) .....:	400 690	380 660	480 830	440
Connection .....:	D Y	D Y	D Y	D
Full load current (A) ...:	530 305	545 315	530 305	545
Speed (rpm) .....:	2980	2980	3580	3580
Power factor cos(phi) ...:	0,91	0,91	0,91	0,92
Efficiency, 100/75/50 (%) :	95,8/96,2/96,1	95,8/96,2/96,1	95,8/96,2/96,1	95,5/95,9/95,8
Ist/In .....:	6,6	5,8	6,6	6,1
Full load torque (Nm) ...:	1.000	980	1.000	980
Tst/Tn .....:	1,7	1,6	1,7	1,5
Tmax /Tn .....:	2,3	2,1	2,3	2
Duty .....:	S1	S1	S1	S1
Ambient temp. (°C) .....:	40	45	40	45

Data are not binding. Hoyer reserves the right to implement changes without notice. The extent of data are not equivalent to nameplate on the motors.